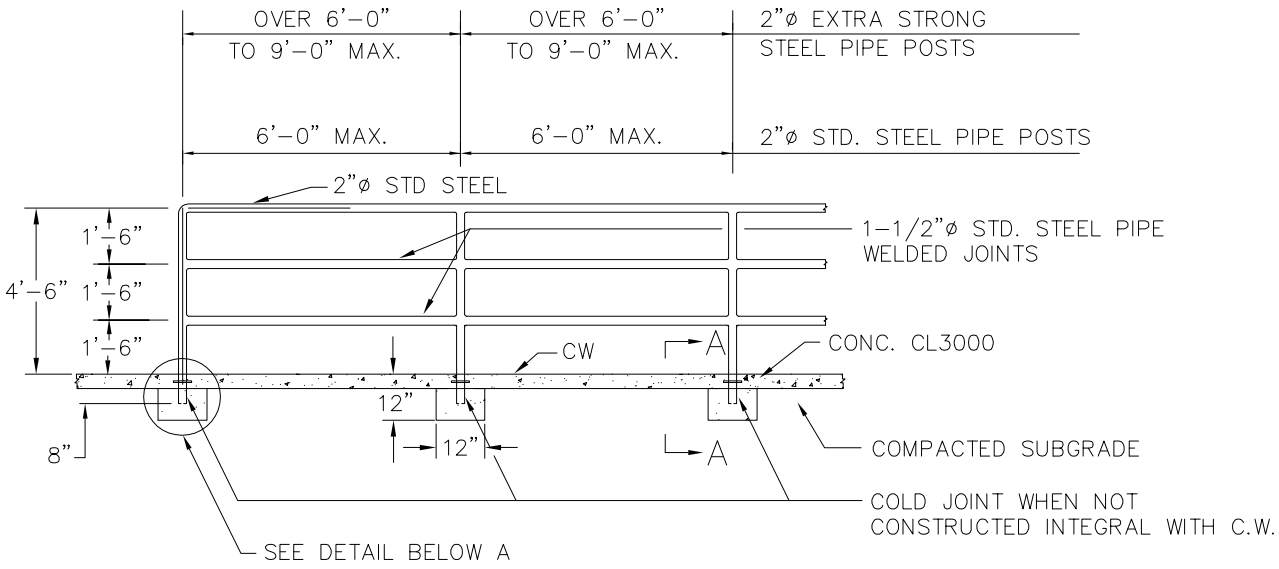

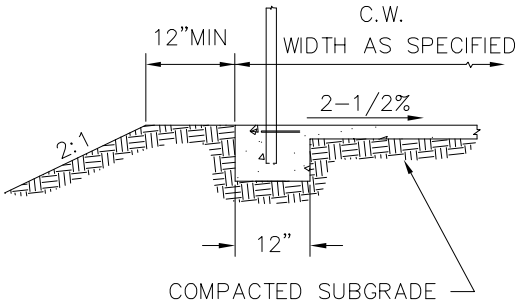

SECTION A-A

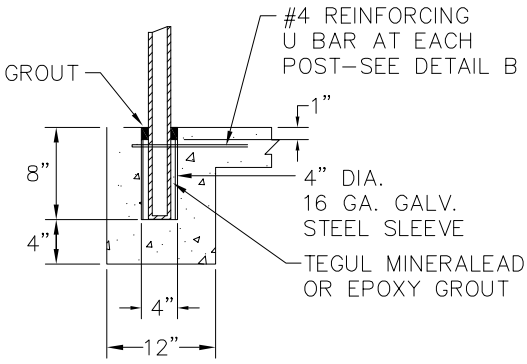

DETAIL A

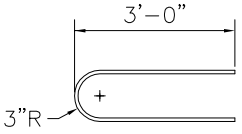

DETAIL B

NOTES:
1. RAILING SHALL BE HOT DIP GALVANIZED AFTER FABRICATION.

2. ALL POSTS SHALL BE PLUMB AND RAILS PARALLEL TO GRADE.

3. PIPE MATERIAL SHALL CONFORM TO ASTM A53.

4. REINFORCING STEEL ASTM A615, GRADE 60.

NOT TO SCALE

STEEL PIPE RAILING
FOR BIKE PATH

ADOPTED
CITY OF RENTON

STANDARD PLANS
LST DATE: 04/04

DATE	REVISION	BY	APPR'D

DWG. NAME: H025

SP PAGE: H025